outline view

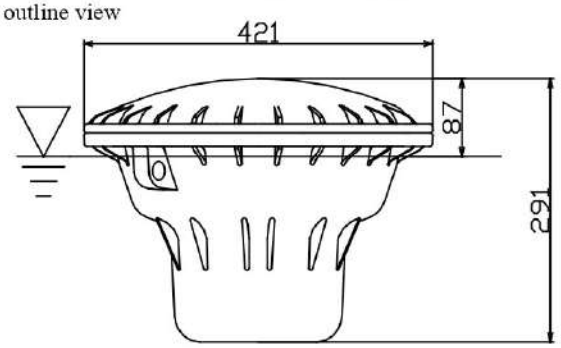

specification

diameter	Approx. 420 mm
hight	Approx. 290 mm
weight	Approx. 9.2 kg
main material	resin
communication method	inmarsat satellite
area	global
data transfer speed	(transmission) 10 bps (reception) 9 bps
senser range	32-122F, 0-50C (0.1 step)
power source	solar panel and battery 12V 12Ah 3W external charger
water proof	Approx. 5 m (0.5 BAR)

Windows PC
with 19 inch LCD monitor

SATELLITE BUOY SYSTEM

MARINE STAR

BUOY : MODEL SV-1800A
CONTROLLER : MODEL SV-SC5000

New Feature Available Now

Command on demand at any time of the day

Bouy accept command 24 hours a day

The status of command process is shown at first sight

Additional indicator to show the progress

Improved reliability in use under severe environment

Accrate speed and heading course projection

SV-1800A BUOY

☆ Absolute privacy "communication via satellite"

information from the buoy and command from the ship station will be through ;
inmarsat satellite→land station(server)→inmarsat satellite

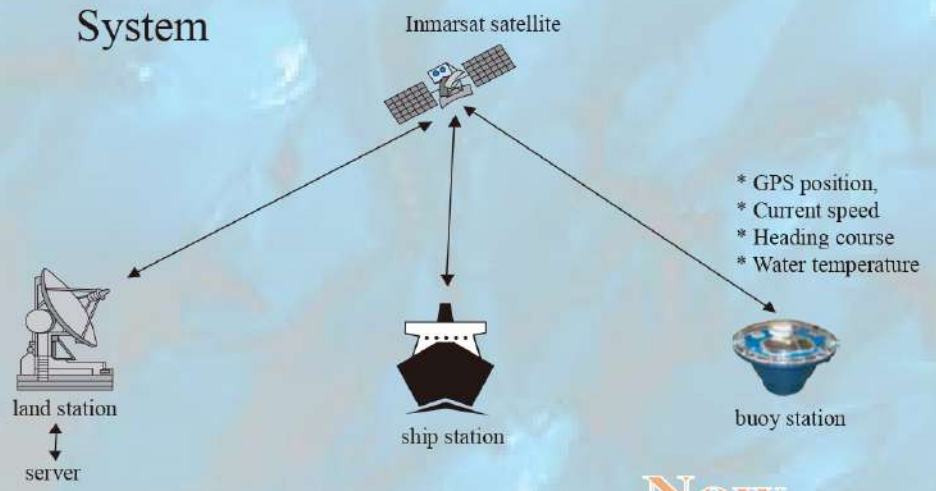

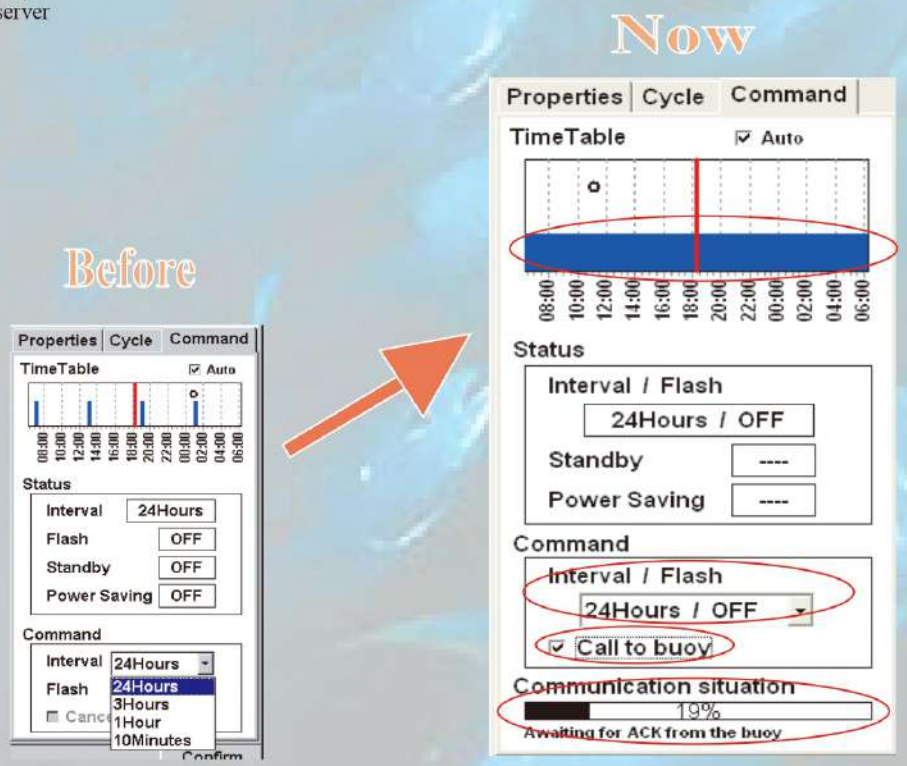

☆ Automatic "Approach Mode" saves time and fuel when apporoaching buoy

The system plots the selected buoy course and speed against the ships course and speed.
A target position of intersect and approach vector are displayed automatically.
As the vessel approaches, the call interval is automatically selected,
and the approach course updated with high accuracy.

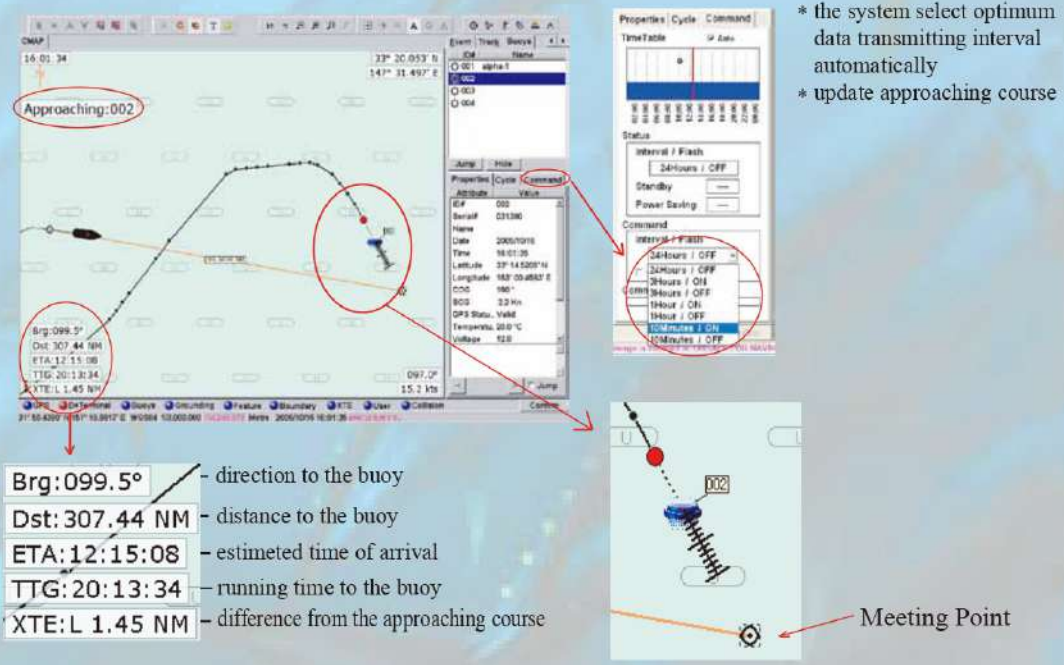

☆ Buoy Icon shows projected present position and heading course

Last buoy position is displayed as a red mark.
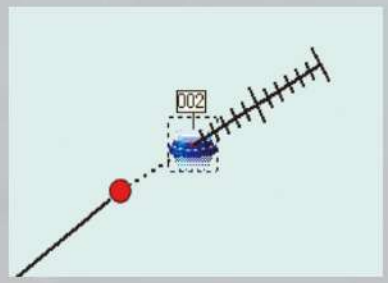
- The system uses the stored GPS data from each buoy to calculate a highly accurate projection of the buoys present position and course.
- A buoy Icon is displayed with buoy ID No., and a 12 hour course projection scale.
- Navigation information to the buoy is displayed and updated automatically in the lower left of the screen.